Version	Date	Author	Change Note	Approved
V1.0	20160325	hxs	First edictor	
V1.0	20160420	hxs	1、修改供电用SYR833PKC; 2、删除VDD_CPU_B、VDD_GPU连接到采样电压回路; 3、R401修改成0K; 4、修改R40 10放置到主控页,注意PCB布局靠控制器; 5、修改VREF_DDR1、VREF_DDR0从VCC_DDR供电;	

Rockchip 瑞芯微电子 Fuzhou Rockchip Electronics

Project:	RK3399_Excavator		
File:	modify note		
Date:	Thursday, November 10, 2016	Rev:	V1.0
Designed by:	Linus	Sheet:	1 of 18

RK3399 I2C MAP

Port	Pin name	Domain	Bus name	Pull-up voltage	Slave Device	Slave Addr (MS 7Bits)	Note	Slave Bus Capability
I2C0	GPIO1_B7/SPI3_RXD/I2C0_SDA GPIO1_C0/SPI3_TXD/I2C0_SCL	PMUIO2 VCC1V8_PMU	I2C_SDA_PMIC I2C_SCL_PMIC	VCC1V8_PMU	TI LP8752-Q1	0x60	DC regulator	100kHz,400KHz,1MHz fast mode+ 3.4MHz high-speed mode
					Rockchip RK808	0x1b	PMIC	
					Fairchild FUSB302B	0x44,0x46	USB-TypeC Mux	100kHz,400KHz,1MHz fast mode+
I2C1	GPIO4_A1/I2C1_SDA GPIO4_A2/I2C1_SCL	APIO5 VCC1V8_IO	I2C_SDA_AUDIO I2C_SCL_AUDIO	VCCA1V8_CODEC	Everest ES8316	0x10	Audio codec	
			I2C_SDA_CAM I2C_SCL_CAM	VCCA1V8_CODEC	Omnivision OV8858	0x6c,0x20	MIPI Camera	
I2C2	GPIO2_A0/VOP_D0/CIF_D0/I2C2_SDA GPIO2_A1/VOP_D1/CIF_D1/I2C2_SCL	APIO2 VCC1V8_IO	Other pin function					
I2C3	GPIO4_C0/I2C3_SDA/UART2B_RX GPIO4_C1/I2C3_SCL/UART2B_TX	APIO4 VCC3V0_IO	I2C_SDA_HDMI I2C_SCL_HDMI	VCC3V0_IO				
I2C4	GPIO1_B3/I2C4_SDA GPIO1_B4/I2C4_SCL	PMUIO2 VCC1V8_IO	I2C_SDA_MEMS I2C_SCL_MEMS	VCC1V8_PMU	Capellamicro CM3218	0x10,0x0c	ALS Sensor	
					AsahiKasei AK8963C		Compass	
					InverSense MPU6500	0x34	Accer+Gyro	
			I2C_SDA_TOUCH I2C_SCL_TOUCH	VCC1V8_TOUCH	Silead GSL3680	0x40	Touch panel	
I2C5	GPIO3_B2/MAC_RXER/I2C5_SDA GPIO3_B3/MAC_CLK/I2C5_SCL	APIO1 VCC3V3_LAN	I2C_SDA_PCIE I2C_SCL_PCIE	VCC3V3_IO				
I2C6	GPIO2_B1/SPI2_RXD/CIF_HREF/I2C6_SDA GPIO2_B2/SPI2_TXD/CIF_CLKIN/I2C6_SCL	APIO2 VCC1V8_IO	I2C_SDA_BAT I2C_SCL_BAT	VCC1V8_DVP	Chrome Battery	0x19	Battery	100KHz
					TI BQ25700	0x6a(I2C) 0x09(SMbus)	Charger	
					Fairchild FUSB302B	0x44,0x46	USB-TypeC Mux	100kHz,400KHz,1MHz fast mode+
I2C7	GPIO2_A7/VOP_D7/CIF_D7/I2C7_SDA GPIO2_B0/VOP_CLK/CIF_VSYNC/I2C7_SCL	APIO2 VCC1V8_IO	Other pin function					

Rockchip 瑞芯微电子	Fuzhou Rockchip Electronics		
Project:	RK3399_Excavator		
File:	POWER DEMAIN		
Date:	Thursday, November 10, 2016	Rev:	V1.0
Designed by:	Linus	Sheet:	3 of 18

RK3399 POWER DIAGRAM

Rockchip 瑞芯微电子	Fuzhou Rockchip Electronics		
Project:	RK3399_Excavator		
File:	POWER TREE		
Date:	Thursday, November 10, 2016	Rev:	V1.0
Designed by:	Linus	Sheet:	4 of 19

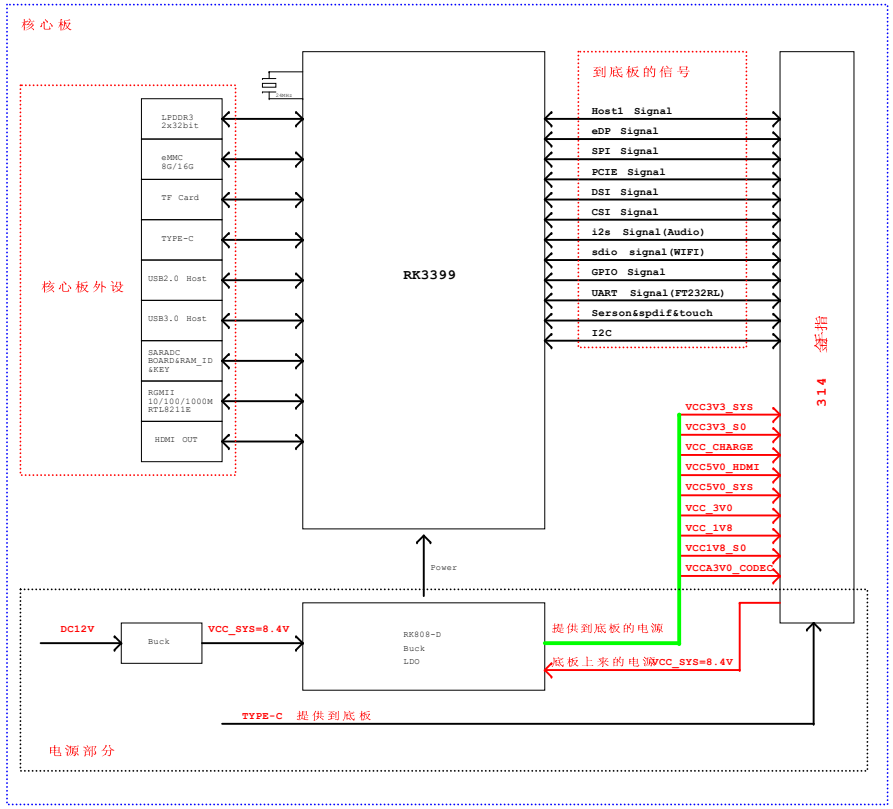

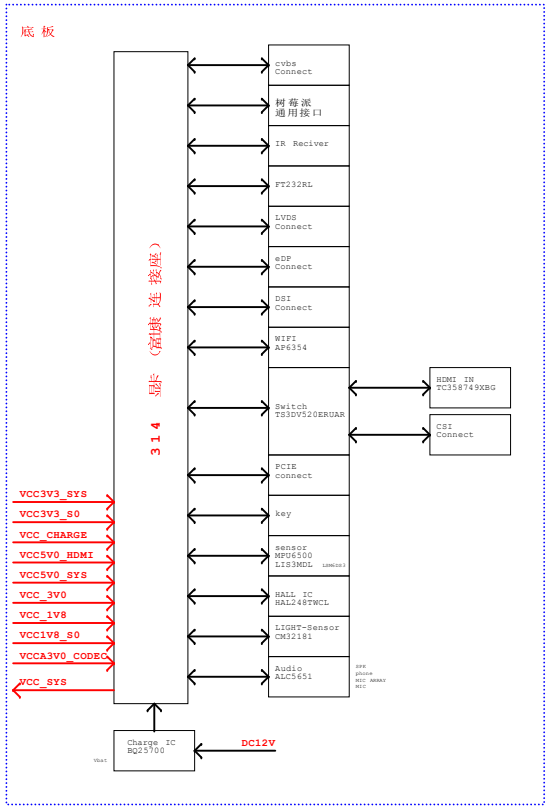

Rockchip 瑞芯微电子	Fuzhou Rockchip Electronics		
Project:	RK3399_Excavator		
File:	POWER TREE		
Date:	Thursday, November 10, 2016	Rev:	V1.0
Designed by:	Linus	Sheet:	4 of 18

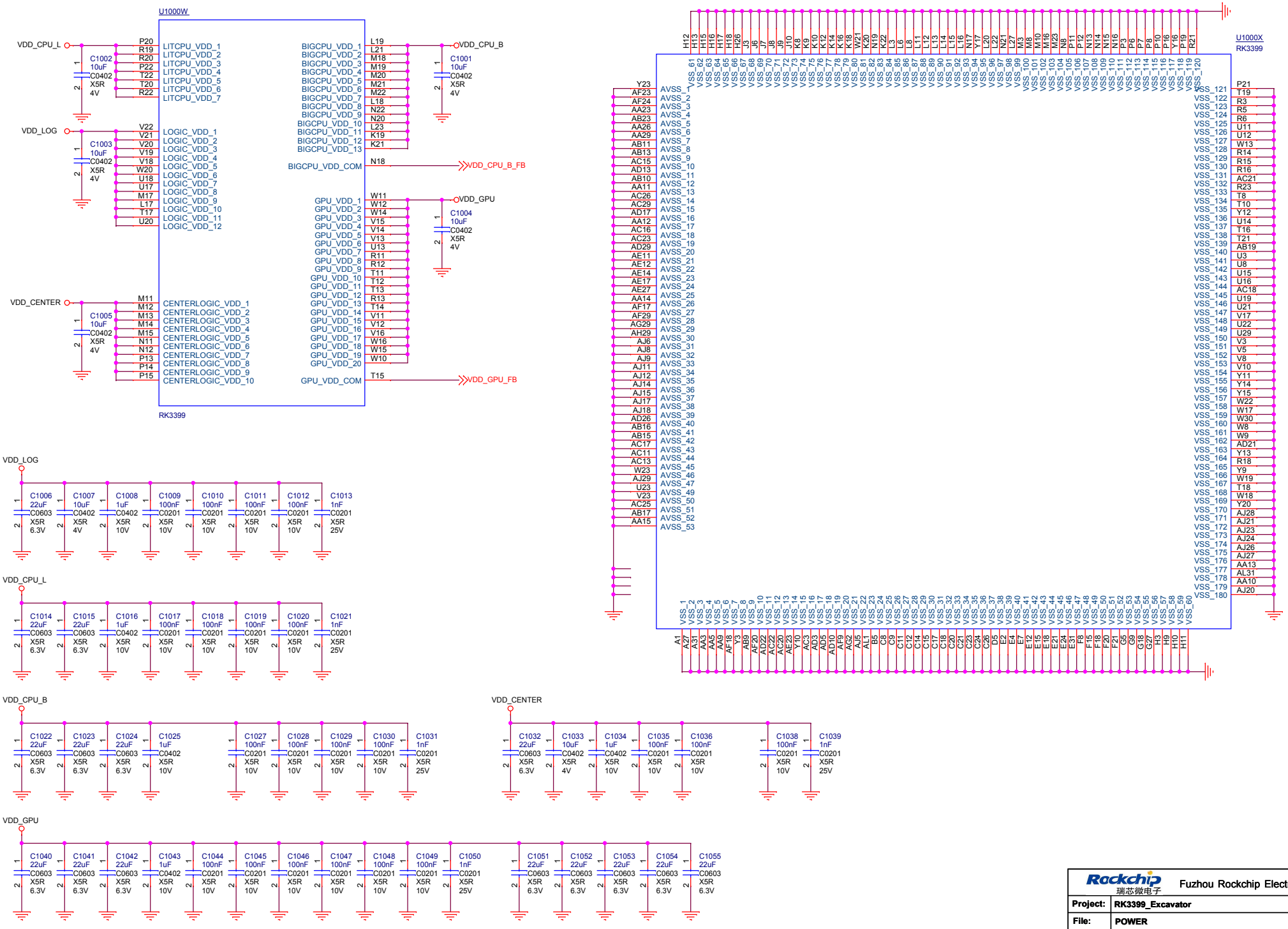

Rockchip 瑞芯微电子	Fuzhou Rockchip Electronics		
Project:	RK3399_Excavator		
File:	POWER		
Date:	Thursday, November 10, 2016	Rev:	V1.0
Designed by:	Linus	Sheet:	5 of 18

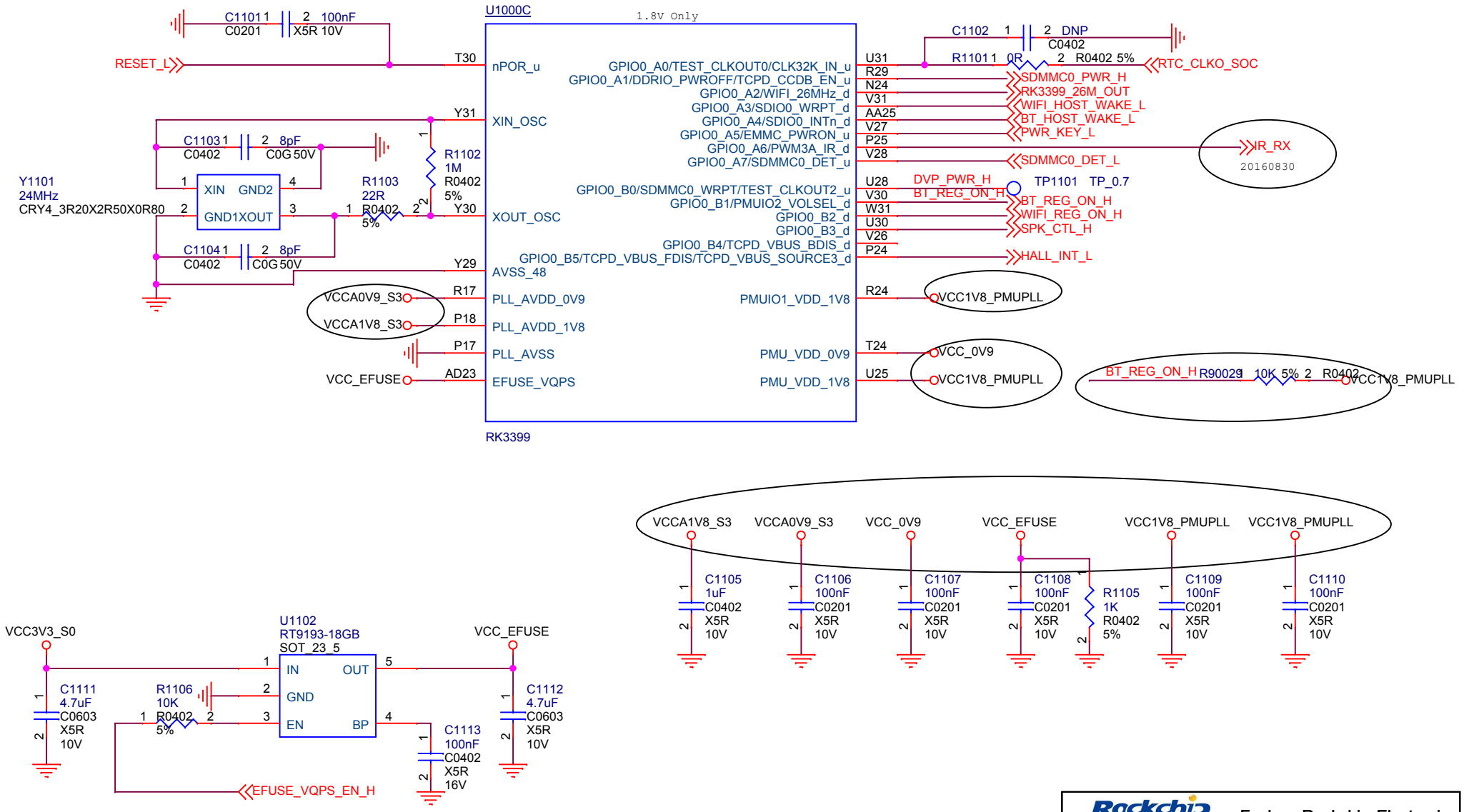

Rockchip 瑞芯微电子	Fuzhou Rockchip Electronics		
Project:	RK3399_Excavator		
File:	PMU		
Date:	Thursday, November 10, 2016	Rev:	V1.0
Designed by:	Linus	Sheet:	6 of 18

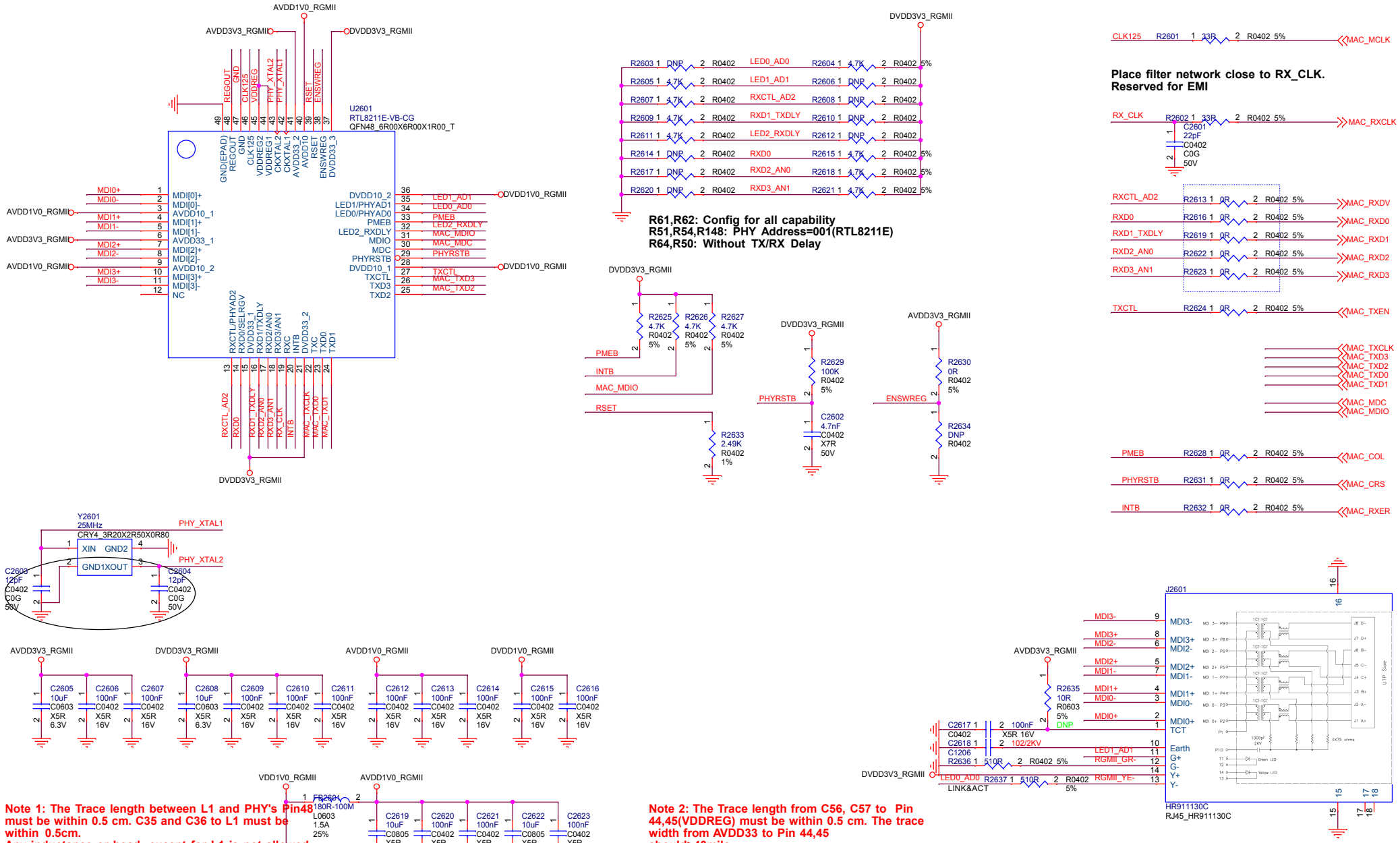

Rockchip 瑞芯微电子	Fuzhou Rockchip Electronics		
Project:	RK3399_Excavator		
File:	<Page name>		
Date:	Thursday, November 10, 2016	Rev:	V1.0
Designed by:	JJJ	Sheet:	7 of 18

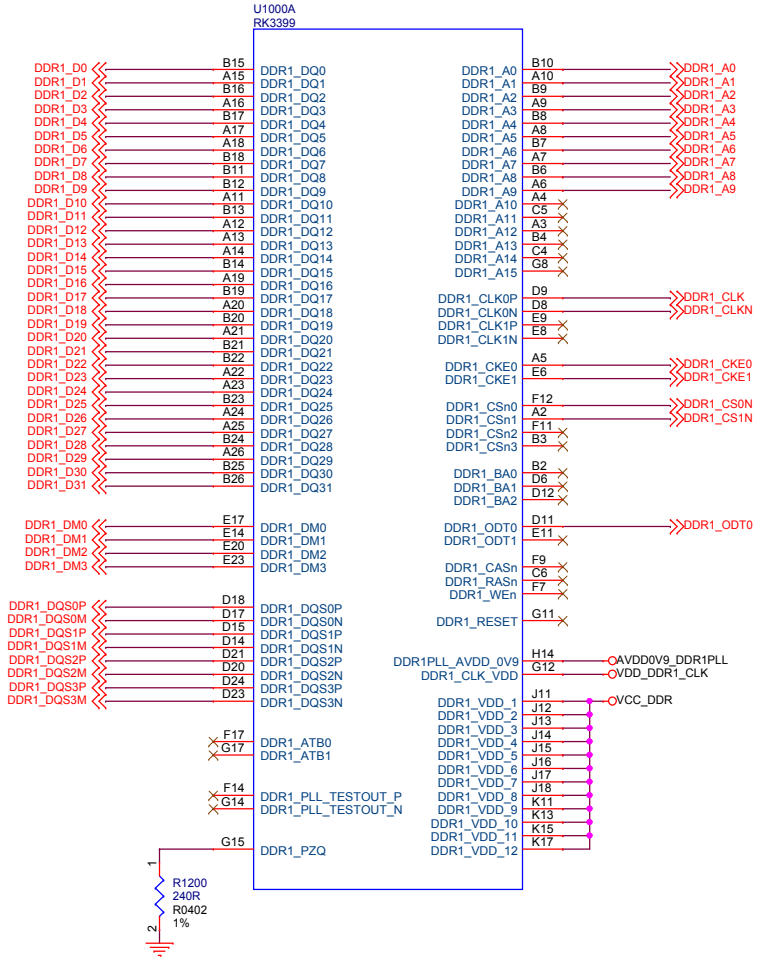

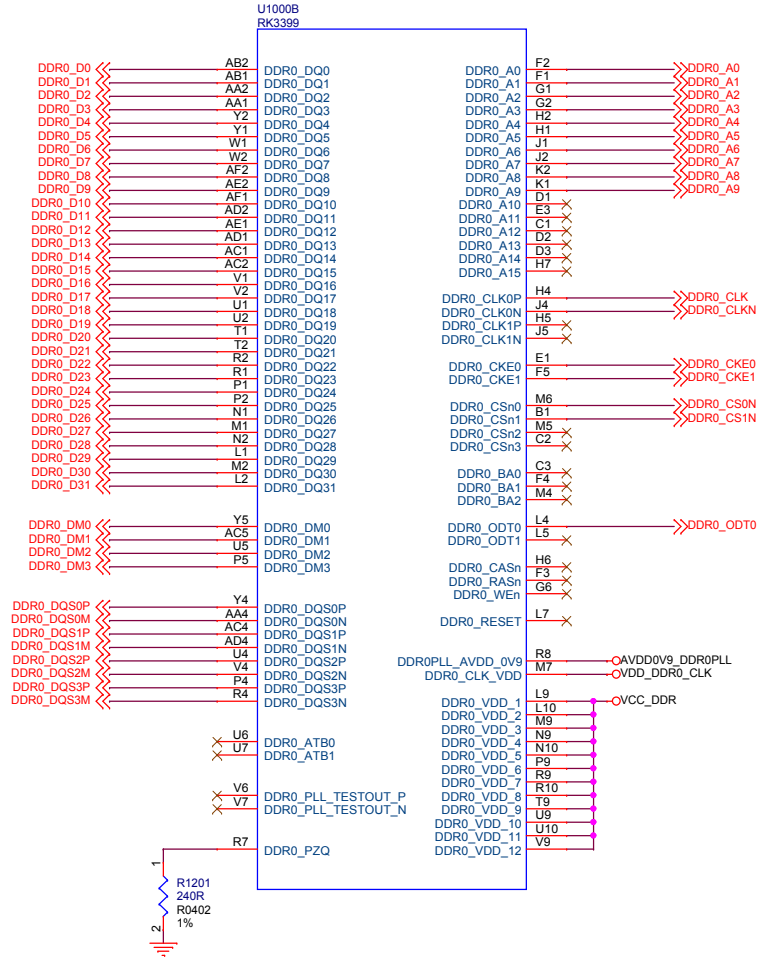

DDR FILTER

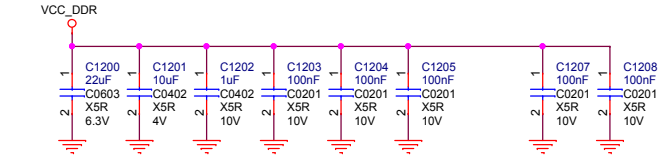

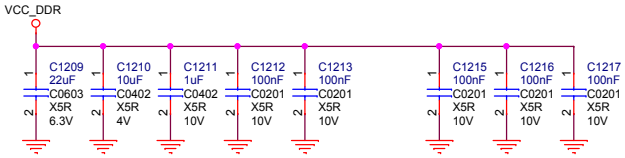

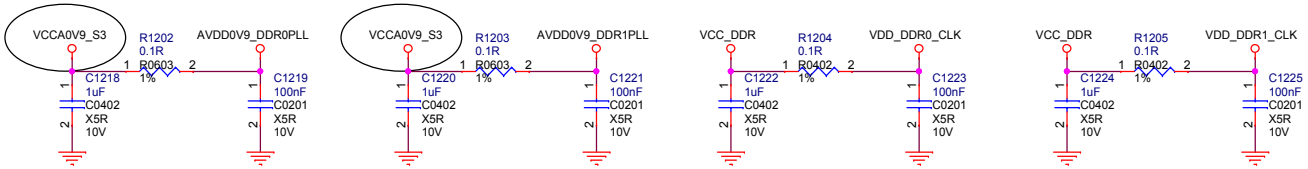

Rockchip 瑞芯微电子	Fuzhou Rockchip Electronics		
Project:	RK3399_Excavator		
File:	<Page name>		
Date:	Thursday, November 10, 2016	Rev:	V1.0
Designed by:	Linus	Sheet:	7 of 23

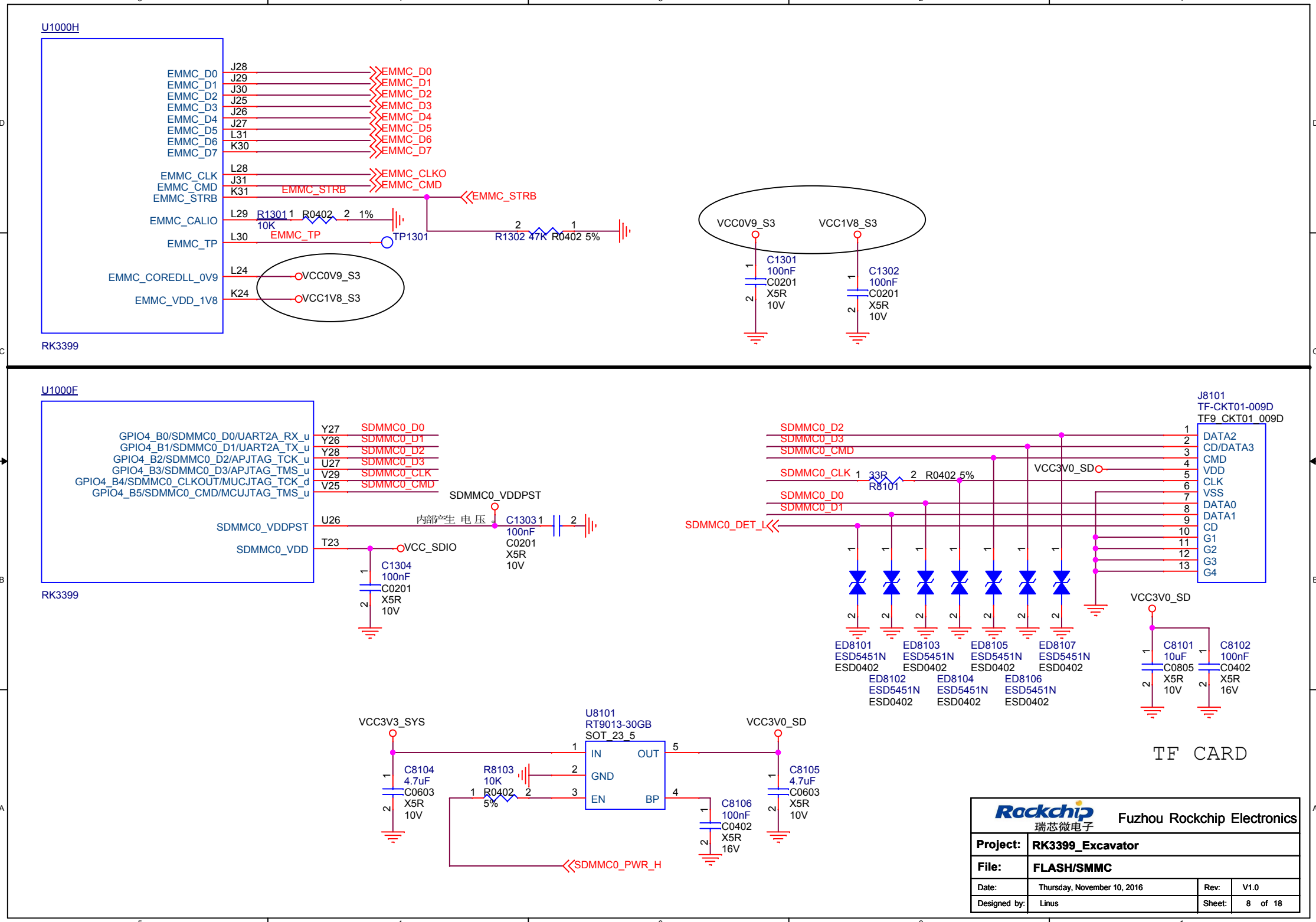
U1000H
EMMC_D0 J28 EMMC_D0
EMMC_D1 J29 EMMC_D1
EMMC_D2 J30 EMMC_D2
EMMC_D3 J25 EMMC_D3
EMMC_D4 J26 EMMC_D4
EMMC_D5 J27 EMMC_D5
EMMC_D6 L31 EMMC_D6
EMMC_D7 K30 EMMC_D7
EMMC_CLK L28 EMMC_CLKO
EMMC_CMD J31 EMMC_CMD
EMMC_STRB K31 EMMC_STRB
EMMC_STRB
EMMC_CALIO L29 R1301 1 R0402 2 1%
10K
EMMC_TP
EMMC_TP L30
TP1301
R1302 47K R0402 5%
EMMC_COREDLL_0V9 L24 VCC0V9_S3
EMMC_VDD_1V8 K24 VCC1V8_S3
RK3399
VCC0V9_S3
VCC1V8_S3
C1301 100nF C0201 X5R 10V
C1302 100nF C0201 X5R 10V
U1000F
GPIO4_B0/SDMMC0_D0/UART2A_RX_u Y27 SDMMC0_D0
GPIO4_B1/SDMMC0_D1/UART2A_TX_u Y26 SDMMC0_D1
GPIO4_B2/SDMMC0_D2/APJTAG_TCK_u Y28 SDMMC0_D2
GPIO4_B3/SDMMC0_D3/APJTAG_TMS_u U27 SDMMC0_D3
GPIO4_B4/SDMMC0_CLKOUT/MUCJTAG_TCK_d V29 SDMMC0_CLK
GPIO4_B5/SDMMC0_CMD/MCUJTAG_TMS_u V25 SDMMC0_CMD
SDMMC0_VDDPST
SDMMC0_VDDPST U26
内部产生 电 压
C1303 100nF C0201 X5R 10V
SDMMC0_VDD T23
VCC_SDIO
C1304 100nF C0201 X5R 10V
RK3399
J8101
TF-CKT01-009D
TF9_CKT01_009D
SDMMC0_D2
SDMMC0_D3
SDMMC0_CMD
SDMMC0_CLK
33R R8101 R0402 5%
VCC3V0_SD
SDMMC0_D0
SDMMC0_D1
SDMMC0_DET_L
DATA2
CD/DATA3
CMD
VDD
CLK
VSS
DATA0
DATA1
CD
G1
G2
G3
G4
ED8101 ESD5451N ESD0402
ED8102 ESD5451N ESD0402
ED8103 ESD5451N ESD0402
ED8104 ESD5451N ESD0402
ED8105 ESD5451N ESD0402
ED8106 ESD5451N ESD0402
ED8107 ESD5451N ESD0402
VCC3V0_SD
C8101 10uF C0805 X5R 10V
C8102 100nF C0402 X5R 16V
TF CARD
VCC3V3_SYS
C8104 4.7uF C0603 X5R 10V
R8103 10K
R0402 5%
U8101
RT9013-30GB
SOT_23_5
IN
OUT
GND
EN
BP
VCC3V0_SD
C8105 4.7uF C0603 X5R 10V
C8106 100nF C0402 X5R 16V
SDMMC0_PWR_H
Rockchip 瑞芯微电子
Fuzhou Rockchip Electronics
Project: RK3399_Excavator
File: FLASH/SMMC
Date: Thursday, November 10, 2016
Rev: V1.0
Designed by: Linus
Sheet: 8 of 18

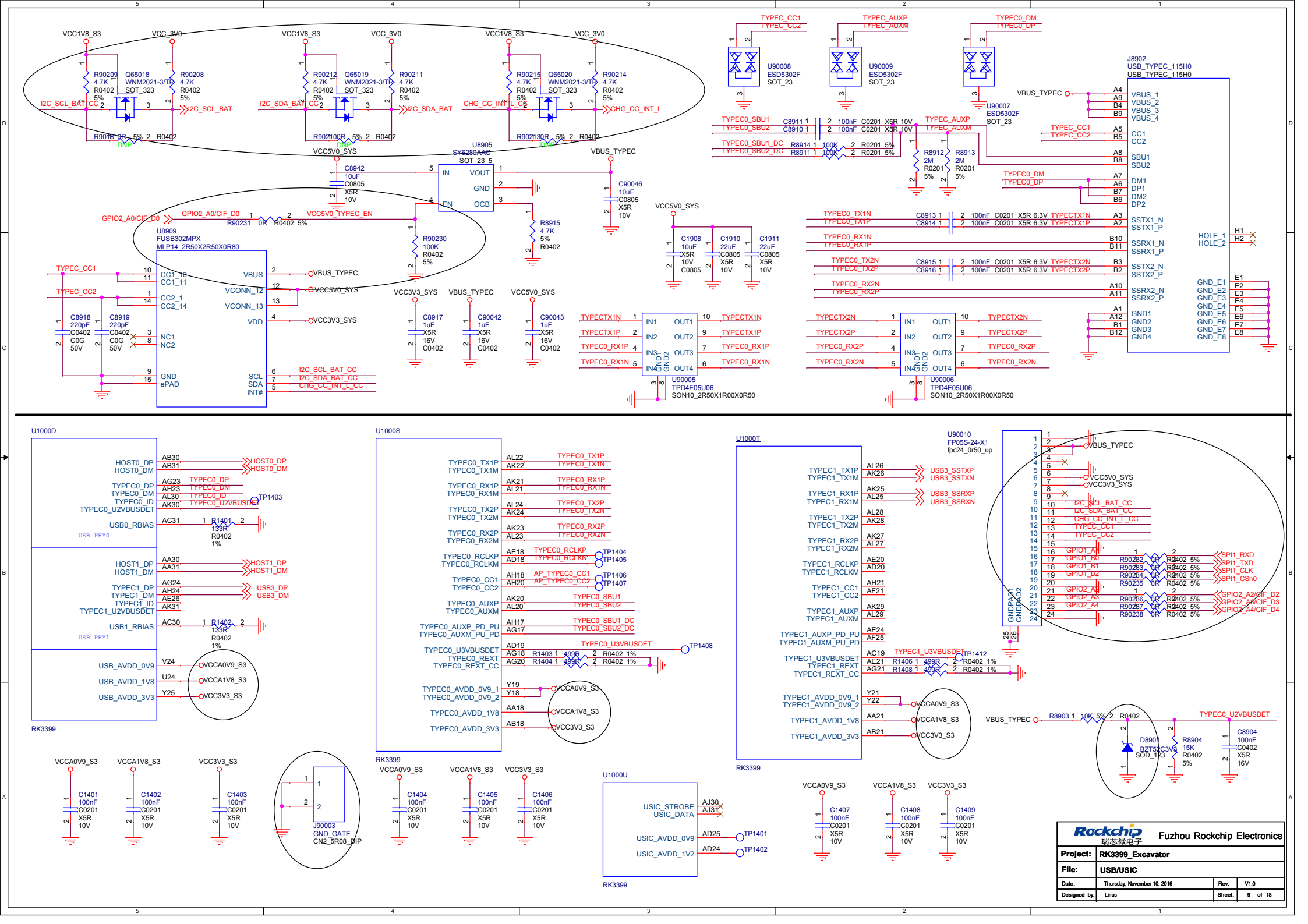
U8909
FUSB302MPX
MLP14_2R50X2R50X0R80
U8905
SY6280AAC
SOT_23_5
U90008
ESD5302F
SOT_23
U90009
ESD5302F
SOT_23
U90007
ESD5302F
SOT_23
J8902
USB_TYPEC_115H0
U90005
TPD4E05U06
SON10_2R50X1R00X0R50
U90006
TPD4E05U06
SON10_2R50X1R00X0R50
U1000D
RK3399
U1000S
RK3399
U1000T
RK3399
U90010
FP05S-24-X1
fpc24_0r50_up
U1000U
RK3399
J90003
GND_GATE
CN2_5R08_DIP
Rockchip
瑞芯微电子
Fuzhou Rockchip Electronics
Project: RK3399_Excavator
File: USB/USIC
Date: Thursday, November 10, 2016
Rev: V1.0
Designed by: Linus
Sheet: 9 of 18

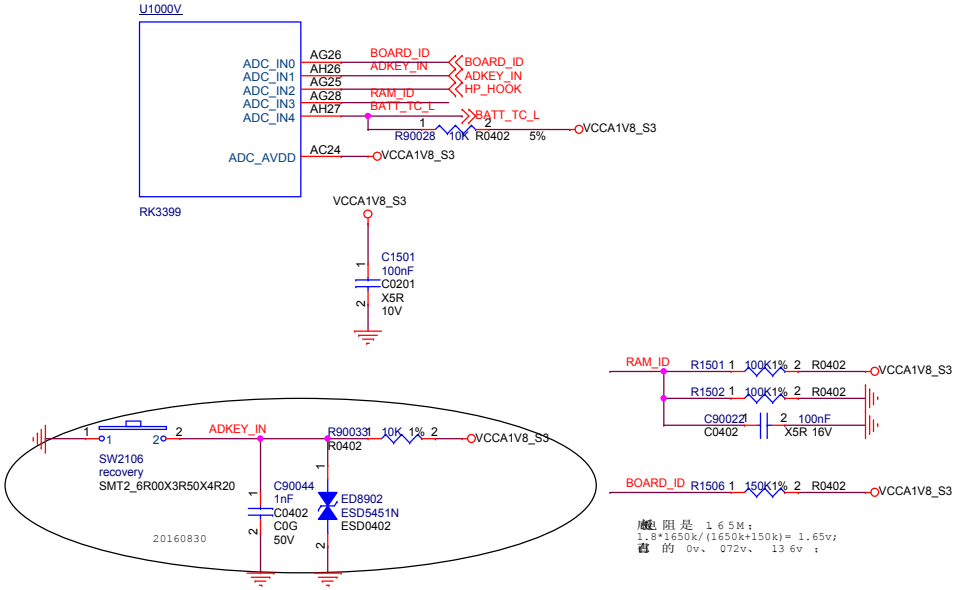

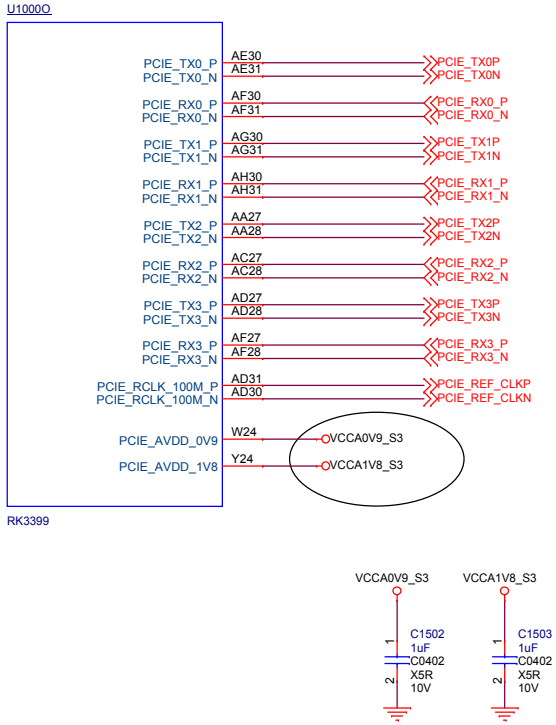

USB2.0 Host / SUB3.0 Host

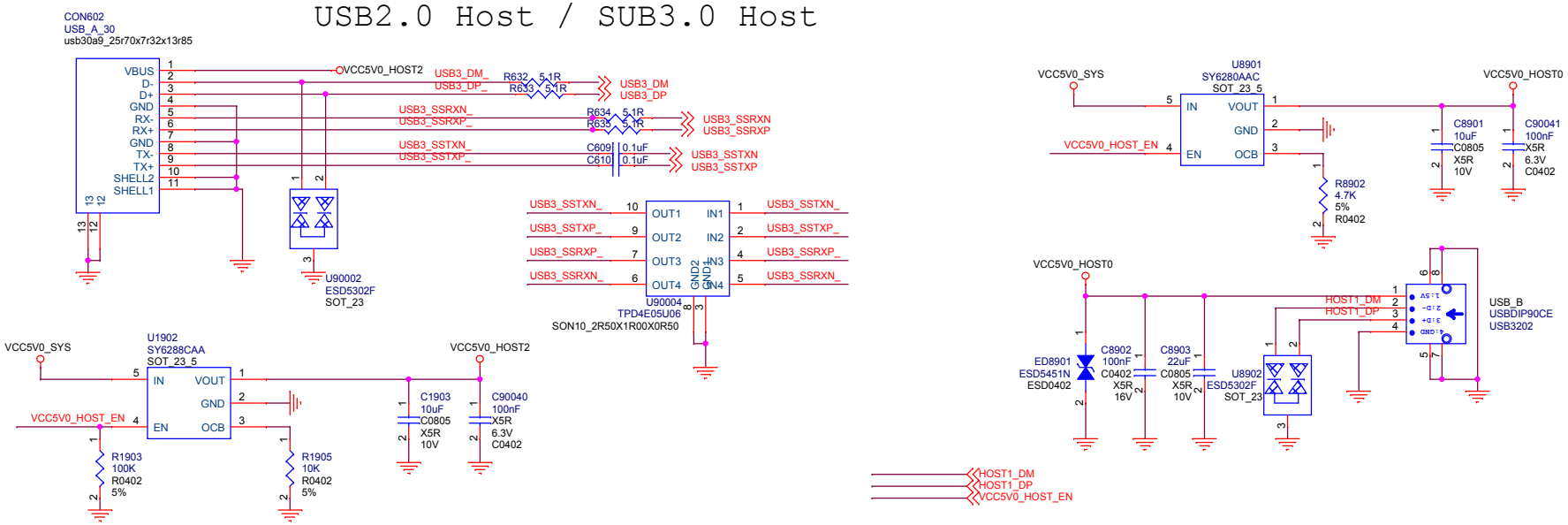

Rockchip 瑞芯微电子	Fuzhou Rockchip Electronics		
Project:	RK3399_Excavator		
File:	SARADC		
Date:	Thursday, November 10, 2016	Rev:	V1.0
Designed by:	Linus	Sheet:	10 of 18

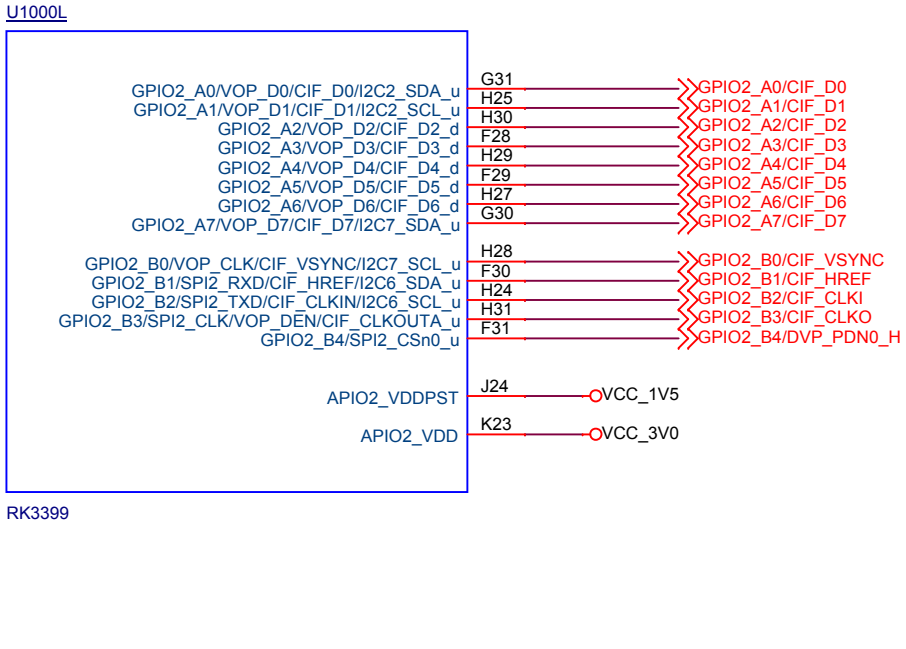

func1	func2	func3
GPIO2_A0/CIF_D0		I2C2_SDA
GPIO2_A1/CIF_D1		I2C2_SCL
GPIO2_A7/CIF_D7		I2C7_SDA
GPIO2_B0/CIF_VSYNC		I2C7_SCL
GPIO2_B1/CIF_HREF	SPI2_RXD	I2C6_SDA
GPIO2_B2/CIF_CLKI	SPI2_TXD	I2C6_SCL
GPIO2_B3/CIF_CLKO	SPI2_CLK	
GPIO2_B4/DVP_PDN0_H	SPI2_CSN	

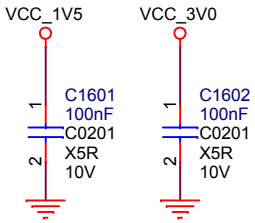

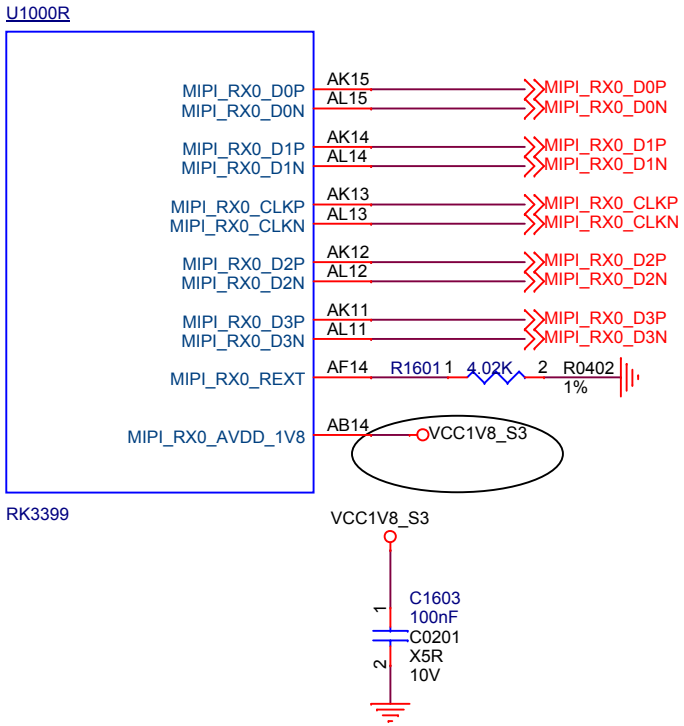

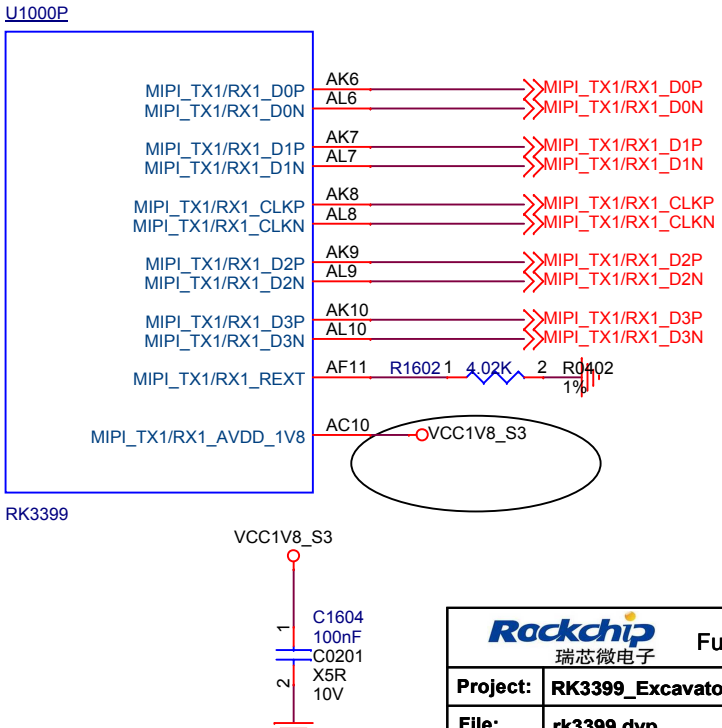

Rockchip 瑞芯微电子	Fuzhou Rockchip Electronics		
Project:	RK3399_Excavator		
File:	rk3399 dvp		
Date:	Thursday, November 10, 2016	Rev:	V1.0
Designed by:	Linus	Sheet:	11 of 18

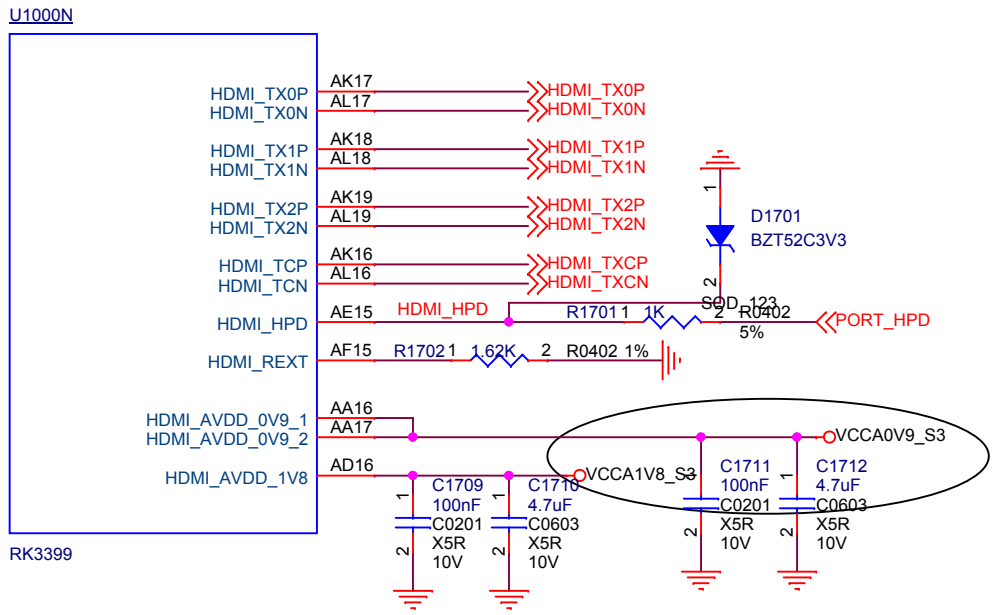

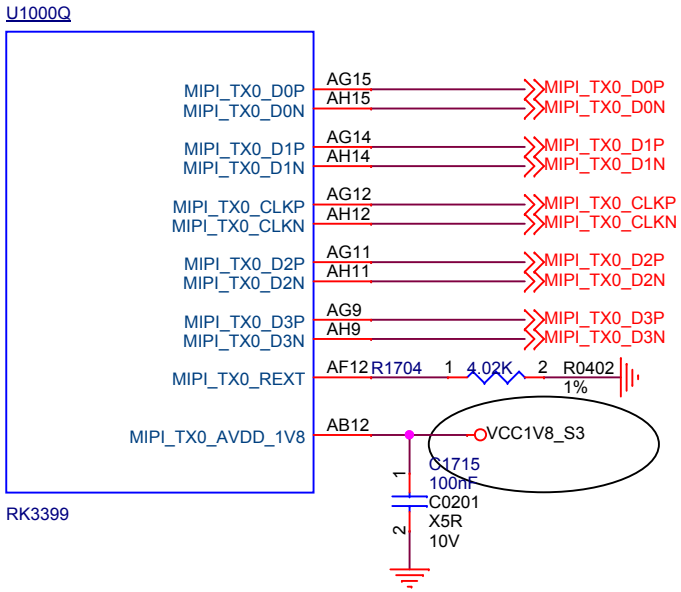

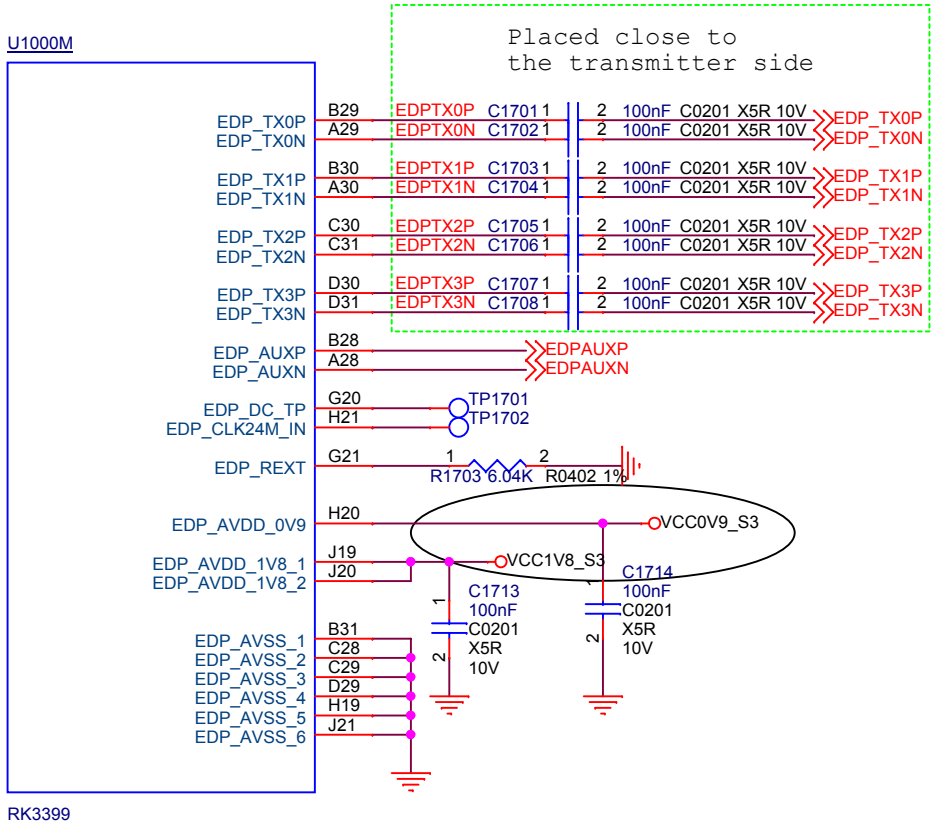

Rockchip 瑞芯微电子	Fuzhou Rockchip Electronics		
Project:	RK3399_Excavator		
File:	rk3399 display		
Date:	Thursday, November 10, 2016	Rev:	V1.0
Designed by:	Linus	Sheet:	12 of 18

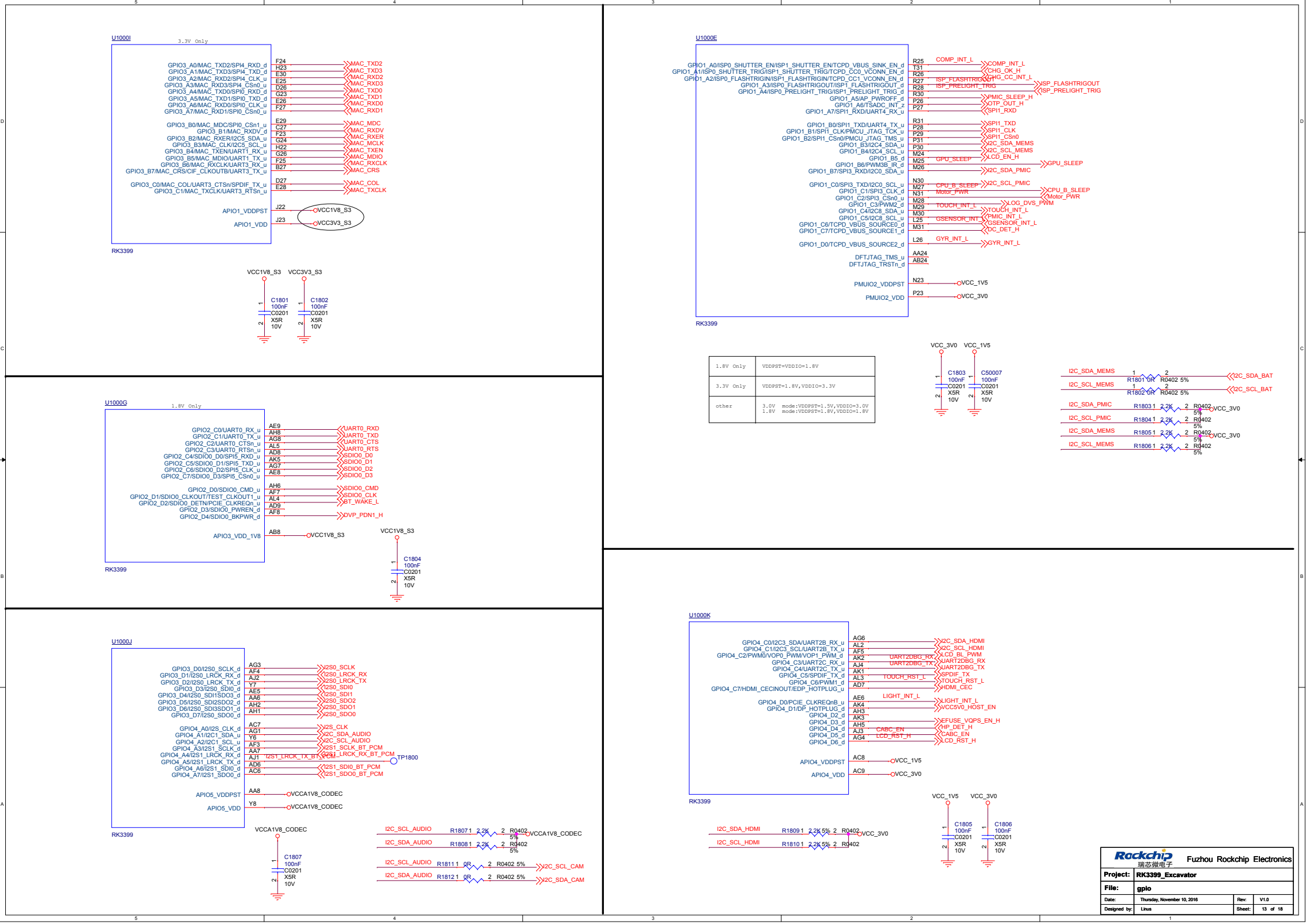

1.8V Only	VDDPST=VDDIO=1.8V
3.3V Only	VDDPST=1.8V,VDDIO=3.3V
other	3.0V mode:VDDPST=1.5V,VDDIO=3.0V 1.8V mode:VDDPST=1.8V,VDDIO=1.8V

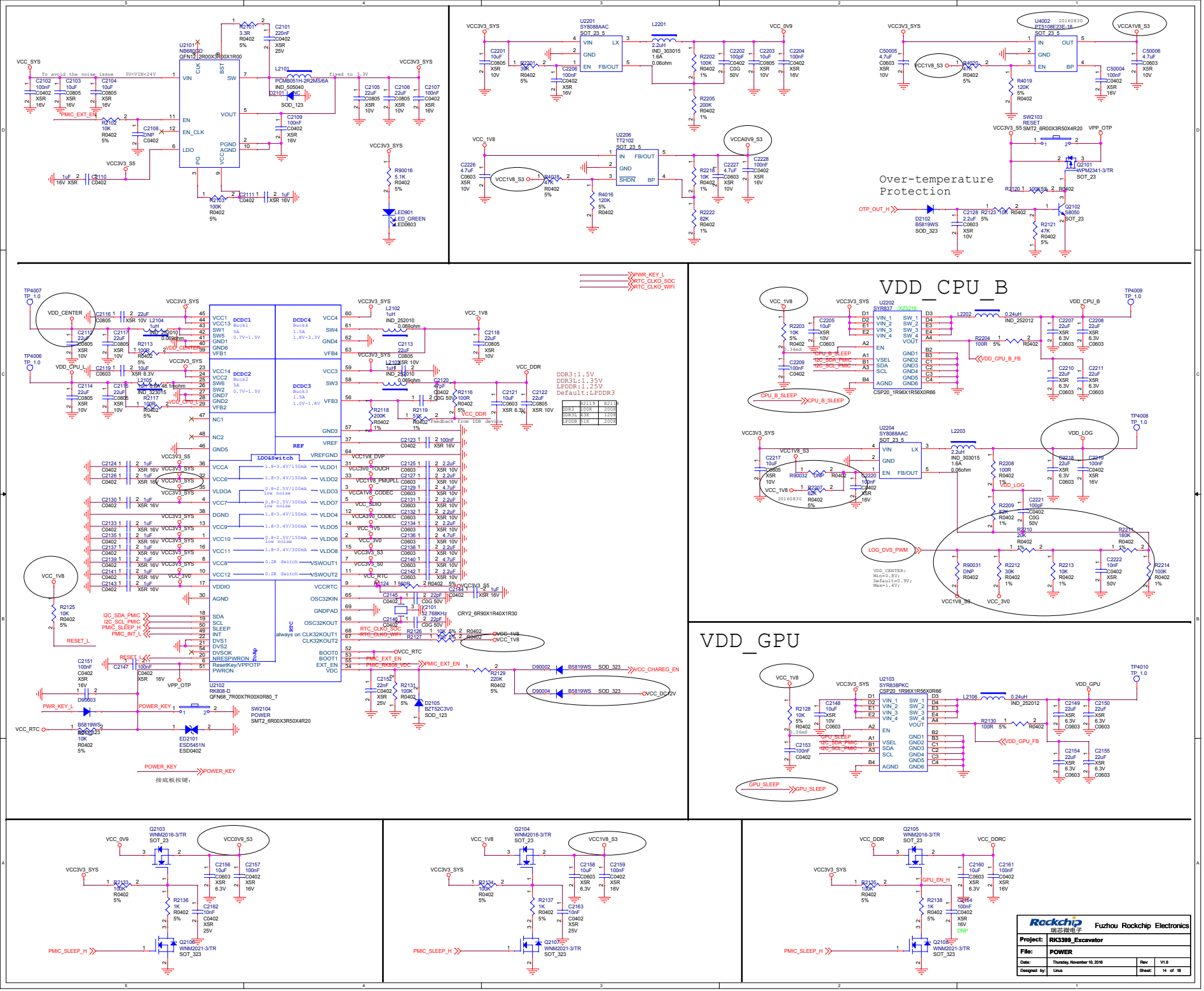
VDD_CPU_B
VDD_GPU
Over-temperature Protection
DDR3:1.5V
DDR3L:1.35V
LPDDR:1.25V
Default:LPDDR3
Rockchip 瑞芯微电子
Fuzhou Rockchip Electronics
Project: RK3399_Excavator
File: POWER
Date: Thursday, November 10, 2016
Rev: V1.0
Designed by: Linus
Sheet: 14 of 18

HDMI Port

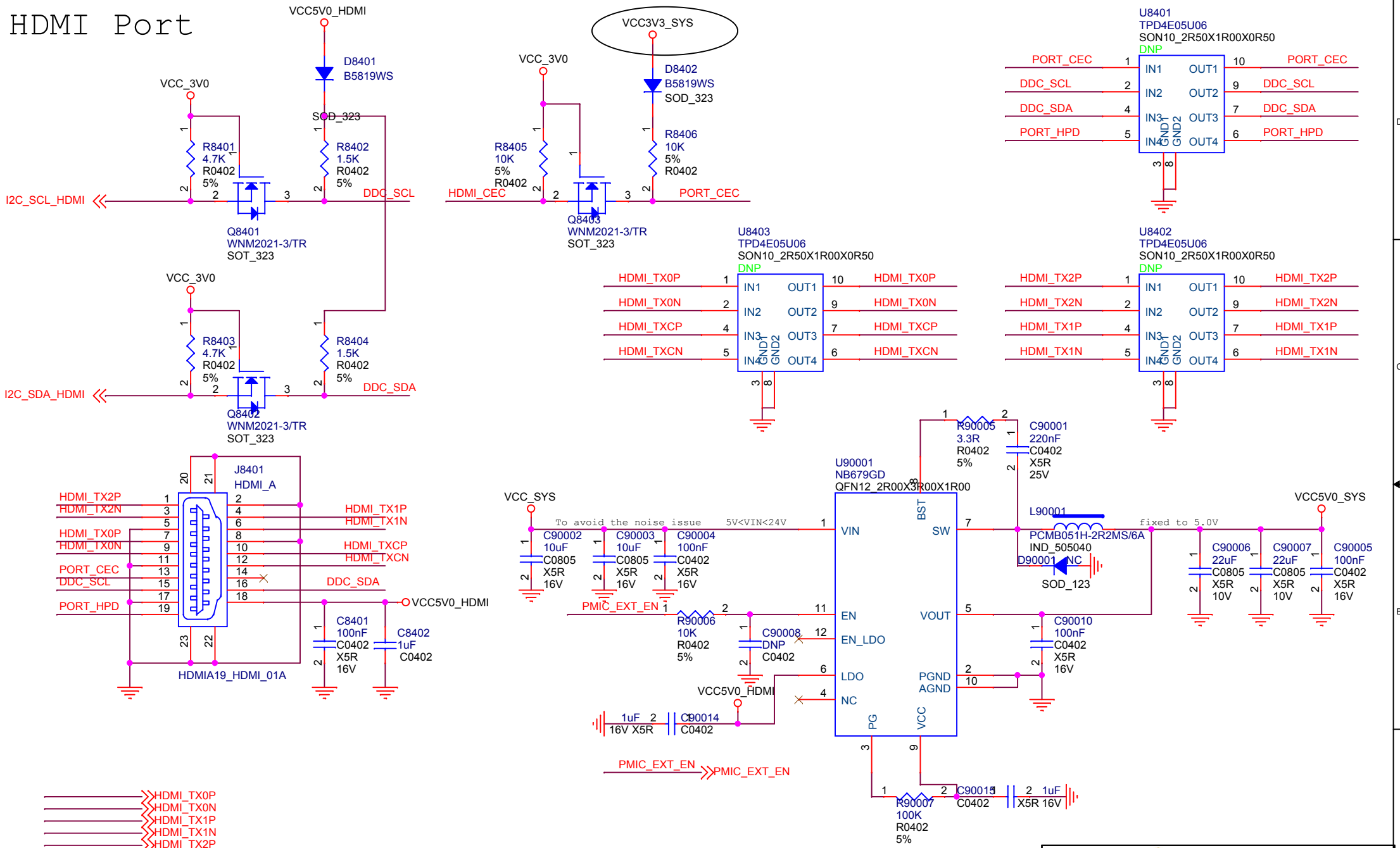

Rockchip 瑞芯微电子	Fuzhou Rockchip Electronics		
Project:	RK3399_Excavator		
File:	HDMI OUT		
Date:	Thursday, November 10, 2016	Rev:	V1.0
Designed by:	Linus	Sheet:	16 of 18

eMMC FLASH

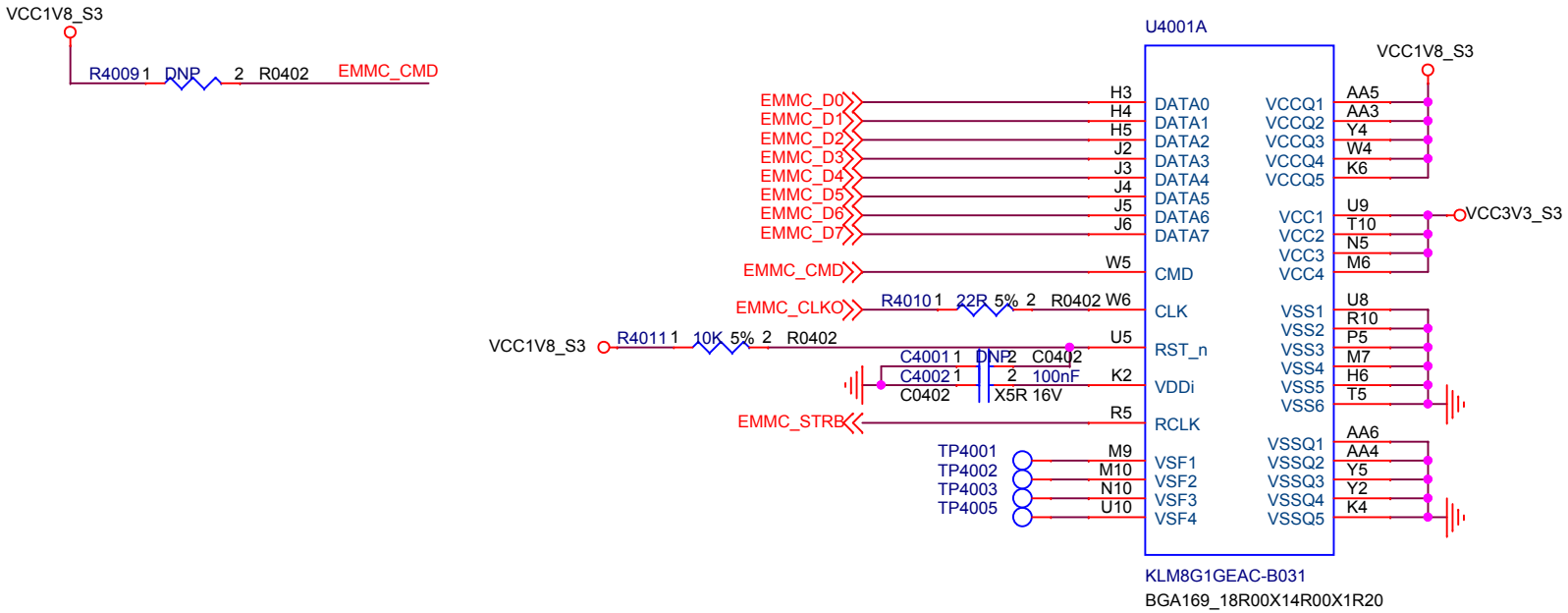

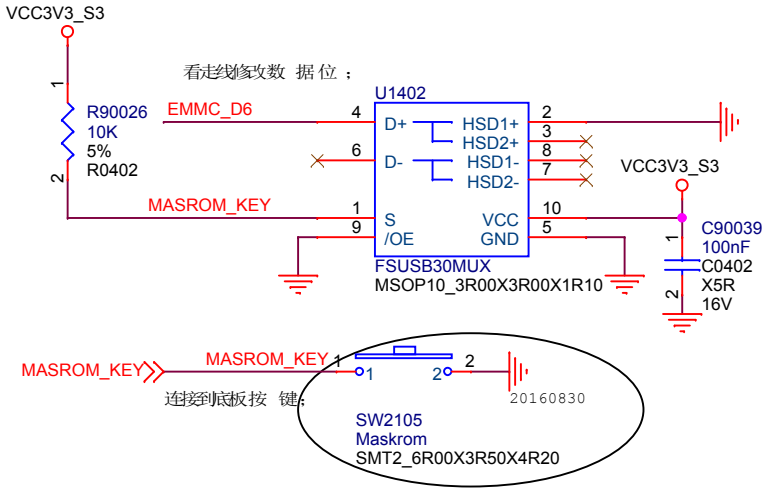

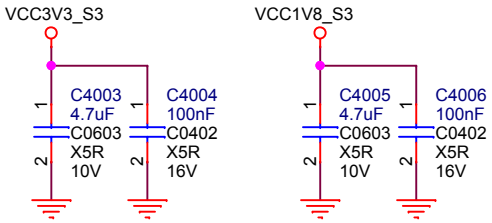

Truth Table

S	$\overline{OE}$	Function
X	H	Disconnect
L	L	D+, D– = $HSD1_n$
H	L	D+, D– = $HSD2_n$

Rockchip 瑞芯微电子	Fuzhou Rockchip Electronics		
Project:	RK3399_Excavator		
File:	EMMC		
Date:	Thursday, November 10, 2016	Rev:	V1.0
Designed by:	Linus	Sheet:	17 of 18

LPDDR3

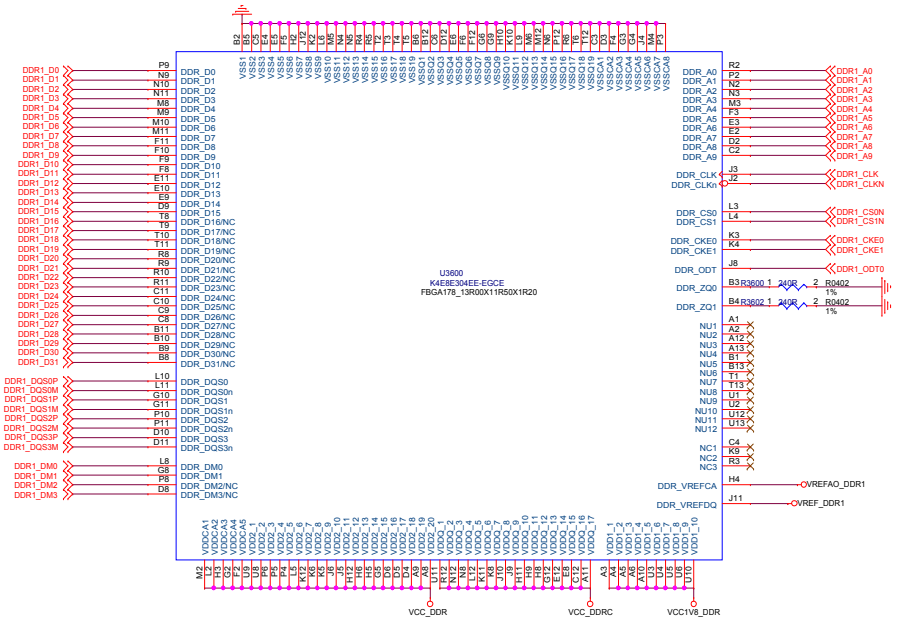

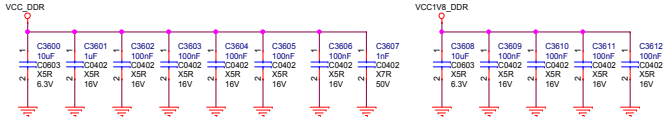

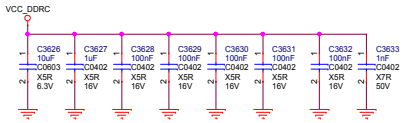

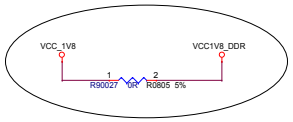

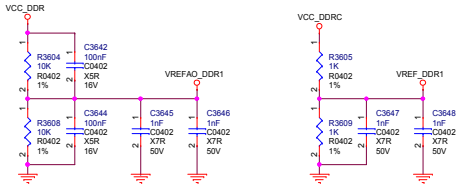

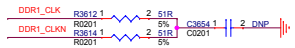

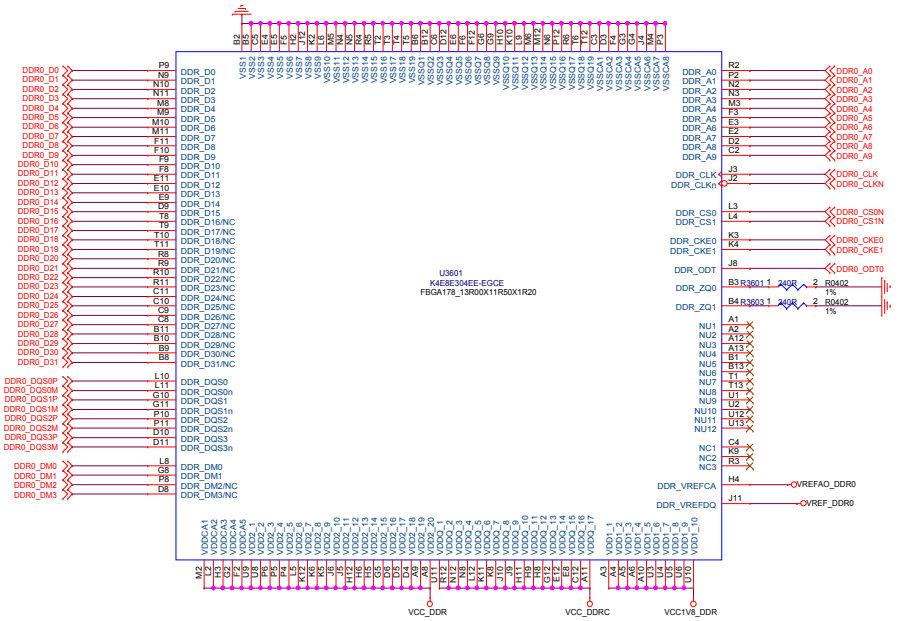

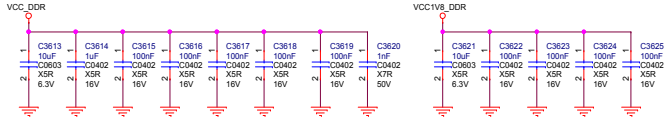

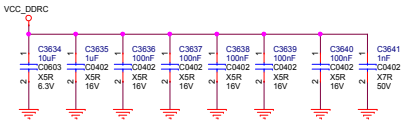

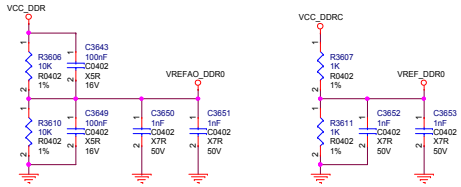

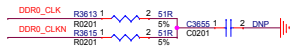

Rockchip 瑞芯微电子	Fuzhou Rockchip Electronics		
Project:	RK3399_Excavator		
File:	<Page name>		
Date:	Thursday, November 10, 2016	Rev:	V1.0
Designed by:	Linus	Sheet:	17 of 23

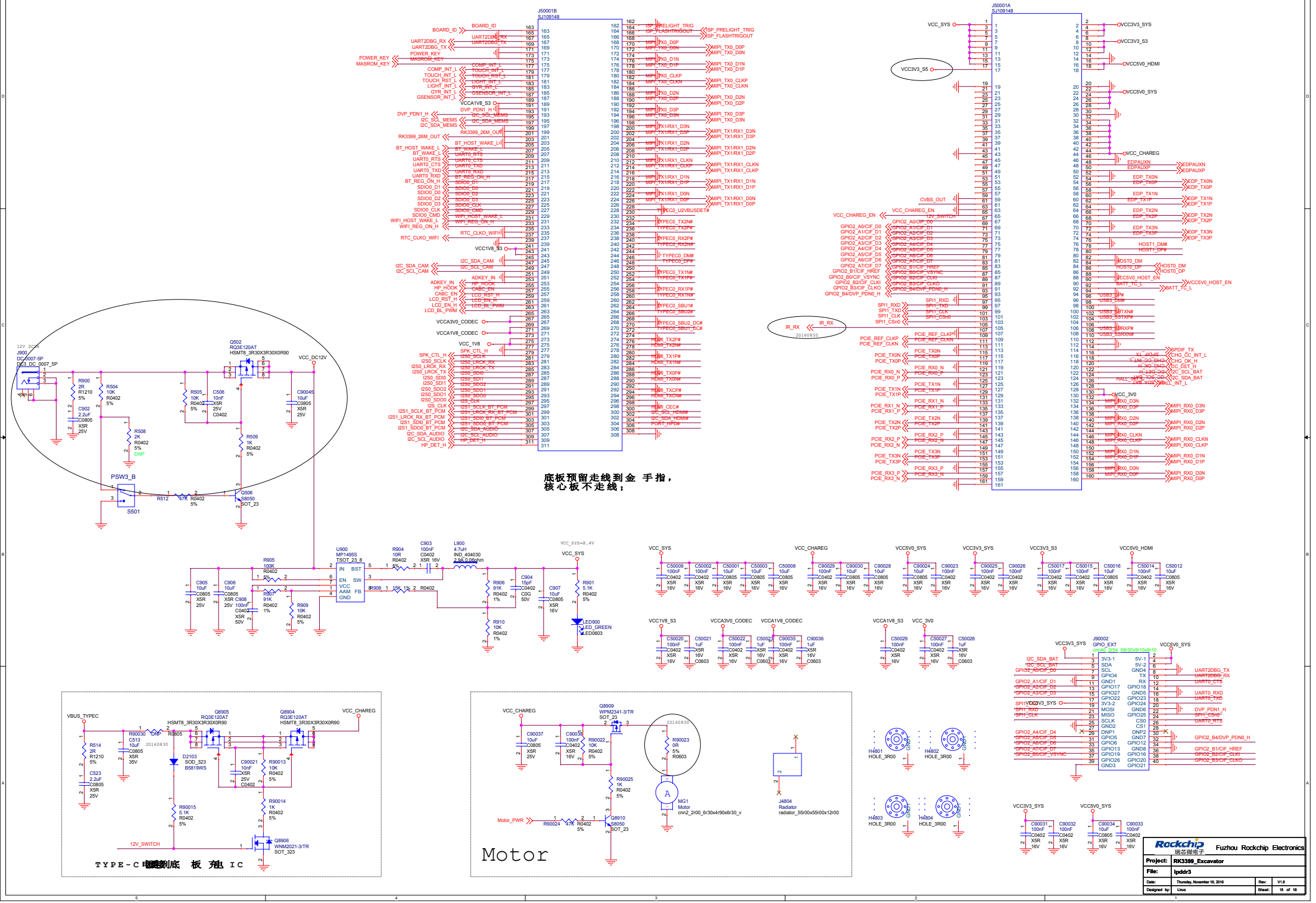
J50001B
SJ109148
J50001A
SJ109148
底板预留走线到金 手指，
核心板不走线；
J900
DC-0007-5P
DC3_DC_0007_5P
12V_DC_IN
VCC_DC12V
Q502
RQ3E120AT
HSMT8_3R30X3R30X0R90
PSW3_B
S501
Q506
S8050
SOT_23
U900
MP1495S
TSOT_23_8
IN
BST
EN
SW
VCC
AAM
FB
GND
L900
4.7uH
IND_404030
2.9A 0.05ohm
VCC_SYS=8.4V
LED900
LED_GREEN
LED0603
VCC_SYS
VCC_CHAREG
VCC5V0_SYS
VCC3V3_SYS
VCC3V3_S3
VCC5V0_HDMI
VCC1V8_S3
VCCA3V0_CODEC
VCCA1V8_CODEC
VCCA1V8_S3
VCC_3V0
J90002
GPIO_EXT
cnn40_2r54_5lr30x9r10x0r10
VCC5V0_SYS
VCC3V3_SYS
H4801
HOLE_3R00
H4802
HOLE_3R00
H4803
HOLE_3R00
H4804
HOLE_3R00
VBUS_TYPEC
VCC_CHAREG
Q8905
RQ3E120AT
HSMT8_3R30X3R30X0R90
Q8904
RQ3E120AT
HSMT8_3R30X3R30X0R90
D2103
SOD_323
B5819WS
12V_SWITCH
Q8906
WNM2021-3/TR
SOT_323
TYPE-C电源到底 板 充电 IC
Q8909
WPM2341-3/TR
SOT_23
MG1
Motor
cnn2_2r00_6r30x4r90x6r30_v
J4804
Radiator
radiator_55r00x55r00x12r00
Motor_PWR
Q8910
S8050
SOT_23
Motor
Rockchip
瑞芯微电子
Fuzhou Rockchip Electronics
Project: RK3399_Excavator
File: lpddr3
Date: Thursday, November 10, 2016
Rev: V1.0
Designed by: Linus
Sheet: 18 of 18